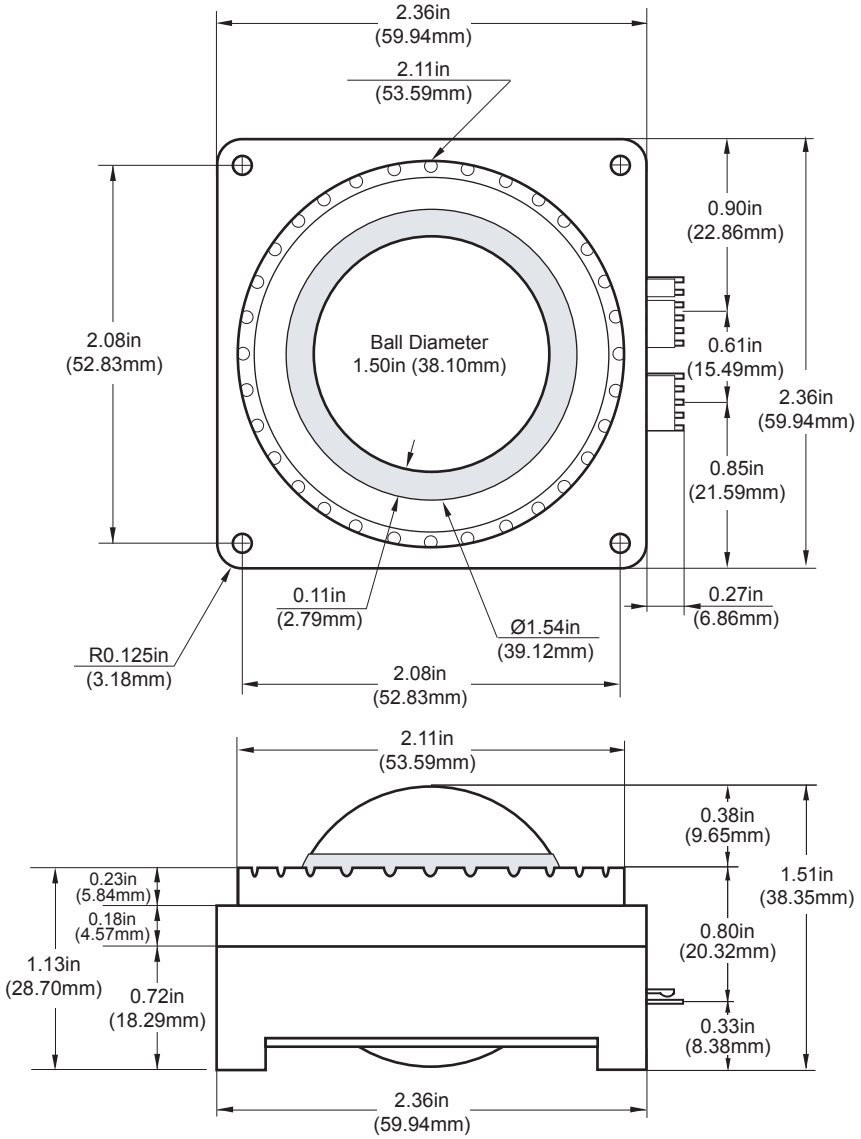

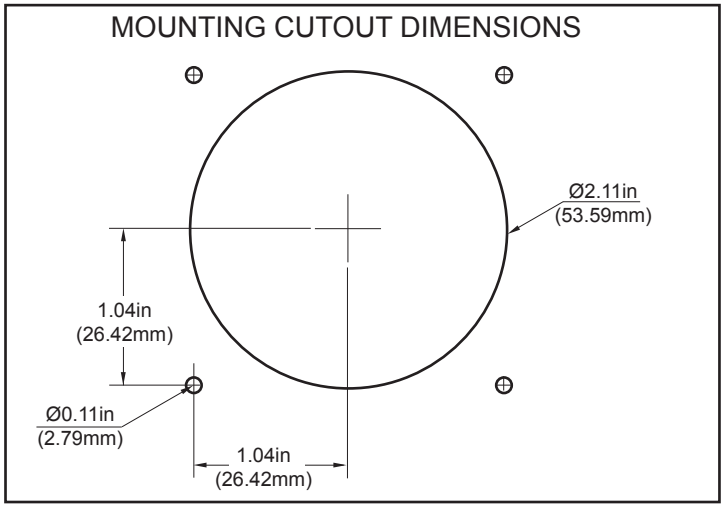

SPECIFICATIONS

ELECTRICAL

USB

INPUT:	5V @ 25mA max (+30mA for backlit illumination)
OUTPUT:	USB 1.1

MECHANICAL

BALL DIAMETER:	1.5”
BALL ROTATION:	Continuous
BALL COLOR/ILLUMINATION:	Blue
TRACKING FORCE:	15g
WEIGHT	33.5g
LIFE CYCLE (BALL ROTATIONS):	5 Million

RoHS compliant

CH Products

P/N **R1507F20V00-B** REV **A**

DESCRIPTION
R150-1.5” USB Trackball with Removable Bezel, Illuminated, Blue

PROPRIETARY AND CONFIDENTIAL
THE INFORMATION CONTAINED IN THIS DRAWING IS THE SOLE PROPERTY OF CH PRODUCTS. ANY REPRODUCTION IN PART OR AS WHOLE WITHOUT THE WRITTEN PERMISSION OF CH PRODUCTS IS PROHIBITED.